星天海洋 STARTEST MARINE

GeoINS-M

MEMS/GNSS combined navigation system



Product Overview

GeoINS-M is a combined navigation system based on MEMS inertial measurement units and external GNSS receiver cards. Through multi-sensor integration and navigation decomposition, the use of satellite positioning information to correct inert-guide measurement errors allows continuous real-time output overhead, roll, direction, location, velocity

Cannot initialise Evolution's
mail component.

Products are designed in a symmetrical manner, with small sizes, easy to install integration, and are suitable for medium- and high-precision mobile measurement systems, large drones, etc.

Apply the scene.

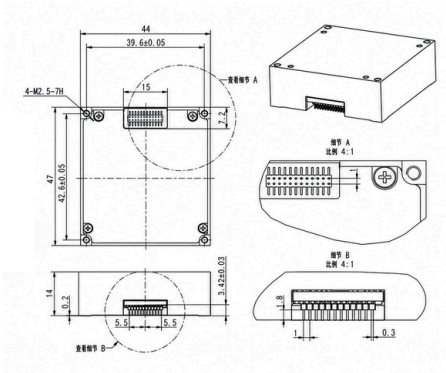

Performance Specifications

Output in Real Time	
One-way output frequency	200 Hz
Structure and electrical properties	
Inertial measurement unit exterior dimensions	47 × 44 × 14 mm
Inertial measurement unit weight	40 g
Enter voltage	3.3 VDC
Work	< 1 W
Structure form	Inertial measurement units and GNSS receiver branch design
Combining navigation and inertia	
Combining Navigation Posture Precision (RMS)	0.03°
Combining navigational accuracy (RMS)	0.1° (baseline 2 m)
Gyro scale	≥±200°/s
gyro zero stability.	≤20°/h
The gyro horns go randomly.	0.3°/√h
Increase Speed Metrics	±10 g
Quick zero-sided stability.	0.2 mg

Position and Speed Precision

SPP Position Precision (RMS)	horizontal 1.2 m, vertical 1.0 m
RRTK Position Precision (RMS)	2 cm+1 ppm horizontal, 5 cm+1 ppm vertical
PPP Position Precision (RMS)	0.1 m horizontal, 0.2 m vertical
Speed Precision	SPP 0.05 m/s； RTK 0.02 m/s； PPP 0.03 m/s

Inertial device scale factor

Gyro and accelerometer factor non-linear	Average of 0.001

Communications and Synchronization Interface

Data Interface	2x232.
PPS signal input	DIO1 (quote foot 7) triggers configuration along

Serial Configuration

Default Serial Portrate	460800 bps, configured

Major unit size weight

Unit Name	Outer Dimensions	Weight
MEMS inertial measurement unit	47 × 44 × 14 mm	40 g
External access to GNSS reception card.	Based on actual selection	Based on actual selection

Description of system integration and use

Item	Interface or indicator	Annotations
Inertial measurement units	MEMS Structure	Partite Design
GNSS receiver card	Outside.	Provide GNSS and PPS signals
PPS Input	DIO1, 7 feet.	Trigger configable along
UART1	TXD：19；RXD：21	Default 460800 bps
UART2	TXD：22；RXD：24	Default 460800 bps
Input Power	VDD: 10/11/12 foot	3.3 VDC（3—3.6 V）
Use requirements	Interrupt power interval 30 s	We're done with rough-to-back exercise.

星天海洋
STARTEST MARINE

www.startest.cn
market@startest.net
+86-15711204676

Beijing StarTest Technology Co., Ltd.
Dongsheng Science & Technology Park, Haidian, Beijing
7F, Bldg. 4, Courtyard 6

Zhejiang StarTest Marine Science & Technology Co., Ltd.
Xiuzhou District, Jiaxing, Zhejiang
Room 01-2, 11F, Bldg. 3, Huayu Center, Xincheng

Official WeChat